MEDNARODNA PODIPLOMSKA ŠOLA JOŽEFA STEFANA

JOŽEF STEFAN INTERNATIONAL POSTGRADUATE SCHOOL

Low-cost spectrum sensor for ultra-narrowband transmissions

Tomaž Šolc, univ. dipl. ing. el. *(tomaz.solc@ijs.si)*

Dept. of communication systems, Institut Jožef Stefan, Ljubljana

Study programme: *Information and communication technologies*

Mentor: *doc. dr. Tomaž Javornik*

VESNA SNE-ESHTER

Custom designed spectrum sensor using off-the-shelf components intended for use in DVB-T receivers.

Based on VESNA, a low power sensor network platform developed at IJS.

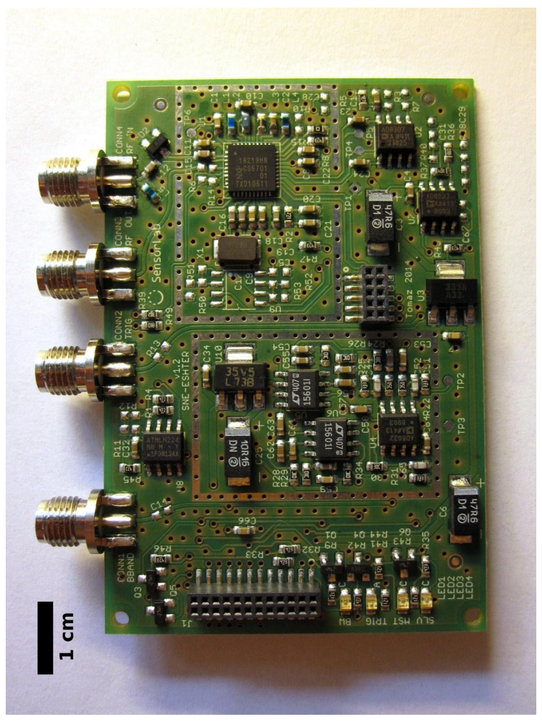

Ultra-narrowband (UNB) transmissions

Transmissions using low bit-rate binary phase- or frequency-shift keying modulations with bandwiths below 1000 Hz on sub-1 GHz frequencies. High range, high spectrum efficiency, low battery use.

This is an emerging technology for small devices infrequently transmitting short packets of data - *Internet of Things*

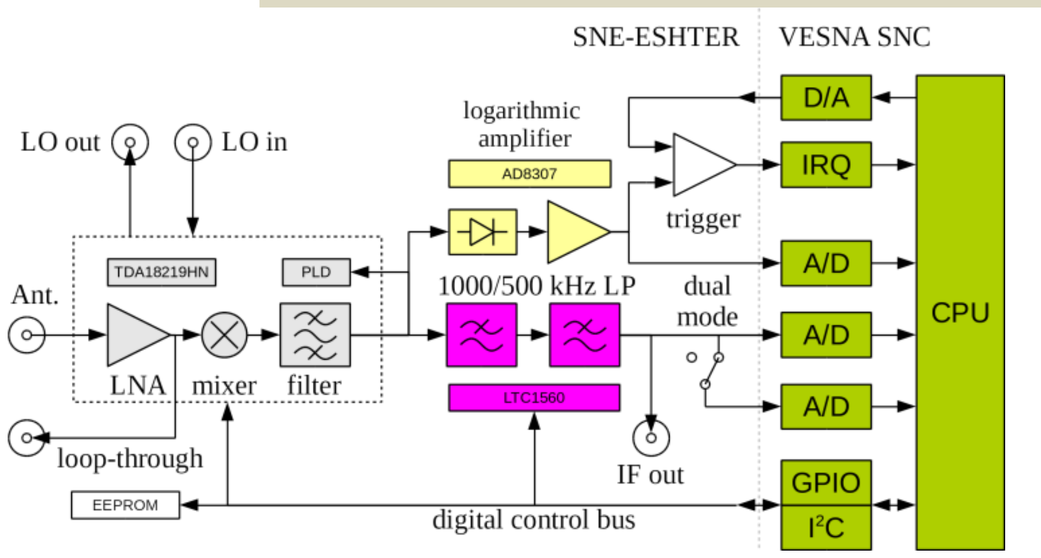

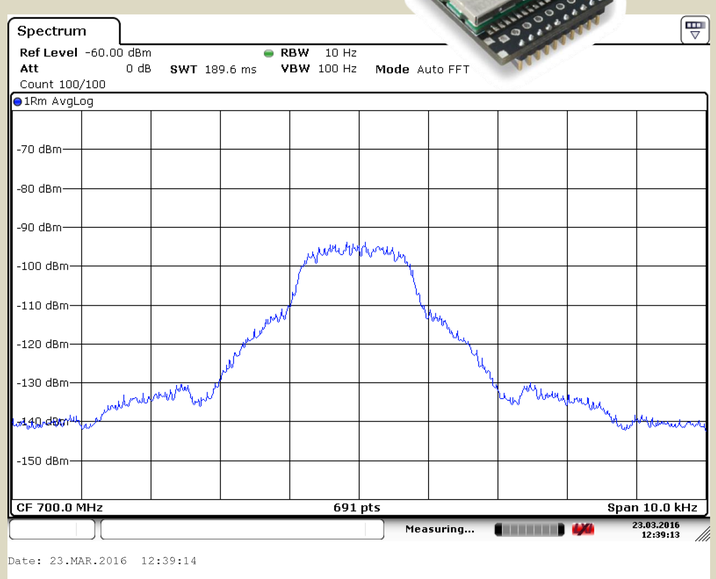

Covariance-based detection

A basic method of spectrum sensing is detecting the energy emitted into the electromagnetic field. However physical laws impose limits on how weak a signal can be detected.

Methods based on signal sample covariances are computationally simple and can detect transmitters even when their signals are many times weaker than noise.

$$\sigma_l = \frac{1}{N_s}\sum_{n=0}^{N_s-1} x_n \cdot x_{n-l} \quad l \in [0, L-1]$$

$$[r_{ij}] = \begin{bmatrix} \sigma_0 & \sigma_1 & \cdots & \sigma_{L-1} \\ \sigma_1 & \sigma_0 & \cdots & \sigma_{L-2} \\ \vdots & \vdots & \ddots & \vdots \\ \sigma_{L-1} & \sigma_{L-2} & \cdots & \sigma_0 \end{bmatrix}$$

$$\gamma_{MAC} = \frac{\max_{i,j}|r_{ij}|}{|r_{11}|} \qquad \gamma_{CAV} = \frac{\sum_{i=1}^{L}\sum_{j=1}^{L}|r_{ij}|}{\sum_{i=1}^{L}|r_{ii}|}$$

What is spectrum sensing?

A method of radio reception where instead of extracting information being sent we are only interested in the fact that a transmission exists.

Real-time information on which radio frequencies are in use enables intelligent devices that can autonomously adapt to radio environment and avoid interference from other devices.

Evaluating UNB signal detection with VESNA SNE-ESHTER and covariance-based detection methods.

A test ultra-narrowband signal was generated using an RF vector signal generator. With a computer-controlled experiment, probability of detection was estimated for different signal power levels and frequency offsets.

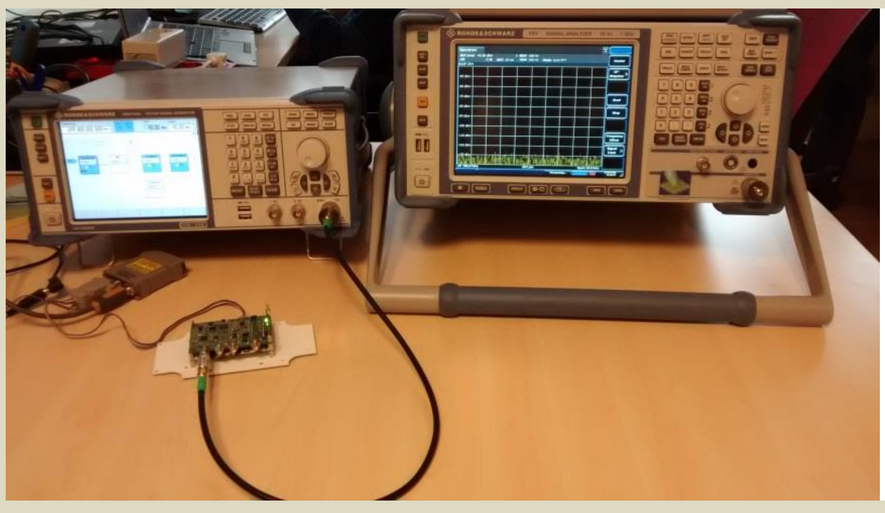

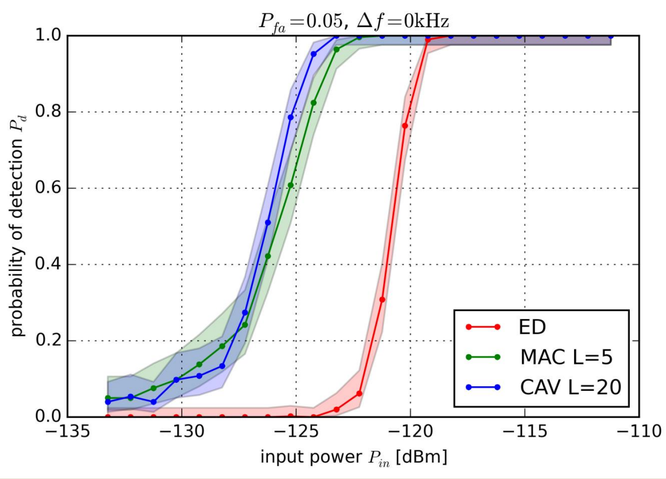

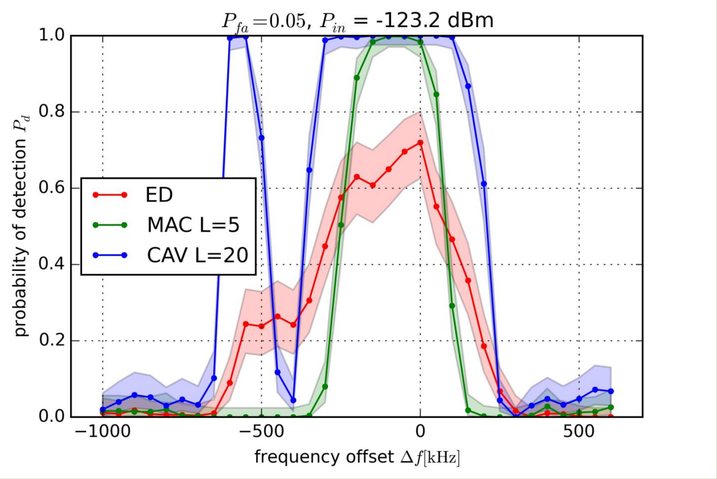

The research leading to these results has received funding from the European Horizon 2020 Programme under grant agreement n°688116.