Next generation TV band receiver for VESNA

Tomaž Šolc
tomaz.solc@ijs.si

SensorLab
Jožef Stefan Institute

Story so far

Existing design

- UHF receiver for energy detection (radiometer)
- Designed in early 2011 around TDA18219HN tuner
  - central frequency 470 – 862 MHz
  - measures incident power in 1.7 or 8 MHz channel
  - 50 ms per channel sampling

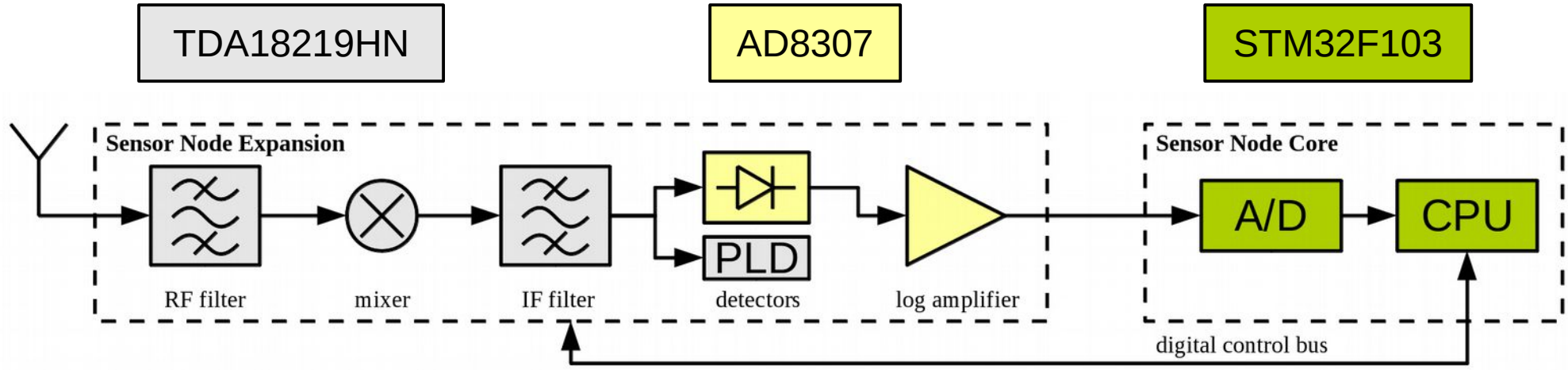

SNE-CREWTV

- Proof-of-concept board
  - designed because no TDA18219HN evaluation board was available
  - 3 prototypes manufactured
- Evaluation of noise on SNC 3.3V line due to SMPS
  - power line artifacts 36 dB above noise floor
  - added a separate linear power supply for the receiver

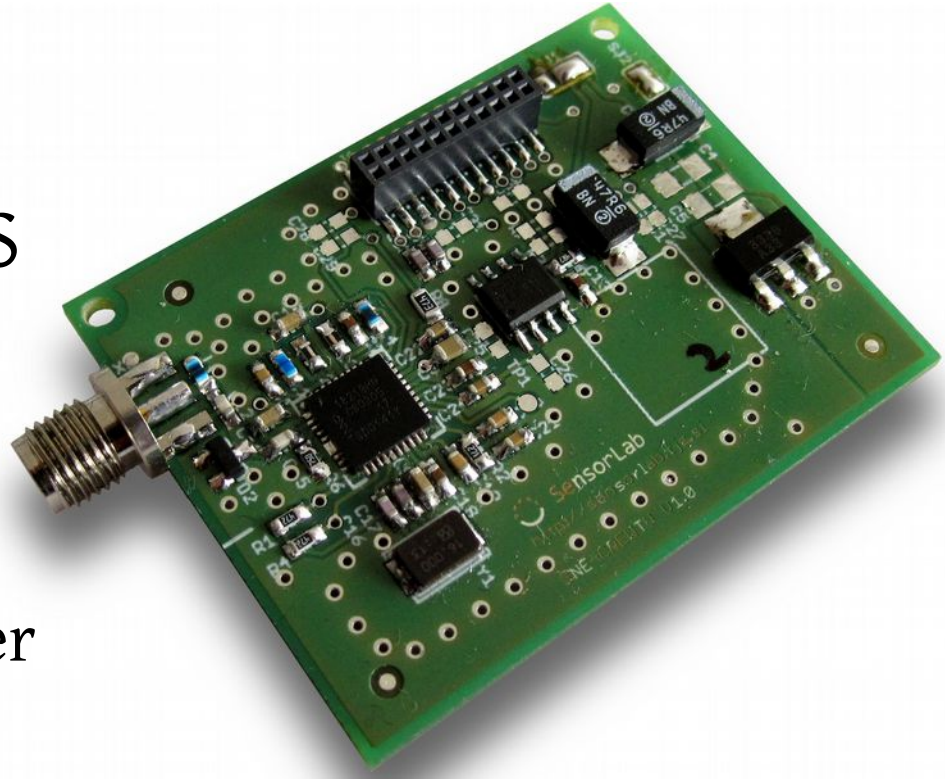

SNE-ISMTV-UHF

- First version of hardware for Logatec
  - deployed in June 2012
  - flexible PCB with 6 placement options
  - added IEEE 802.15.4 transceiver
  - added options for TI CCxxxx series transceivers
- Predicted heating problems in summer
  - added passive cooling for TDA18219HN

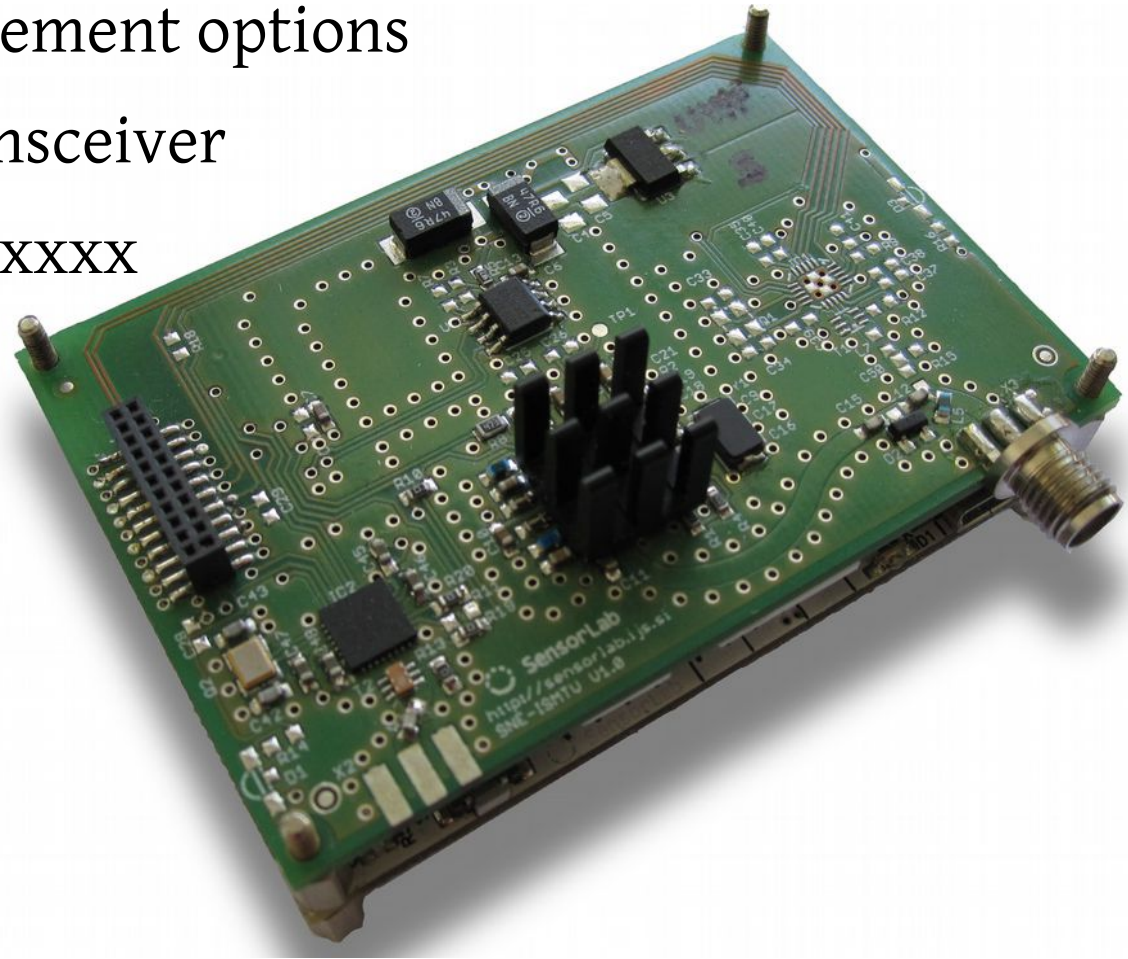

Practical uses

- 8 permanently deployed in Logatec
  - distributed sensing in CREWTV project with Instituto de Telecomunicações
  - wireless microphone detection at SNR = -2 dB, P_d = 90%
    (*Dionísio, Ribeiro, Marques: CREW project deliverable D7.4.2*)
- Improvised car-mounted device
  - combined with GPS tracking
  - CREW measurements for evaluation of propagation models for TVWS
    (*Moerman, et al.: CREW project deliverable D6.3*)

Motivation for redesign

- Experiments with advanced spectrum sensing methods
  - all require access to signal phase as well as magnitude
- Higher frequency resolution for energy detection
  - wireless microphones occupy ~200 kHz of spectrum,
    compared to 1700 kHz narrowest TDA18219HN channel setting.
- Practical problems
  - SNE-ISMTV antenna connector blocks micro-USB on SNC
  - EMI noise from SNC, SNR
- CSMA-MAC implementations
  - e.g. *Puschmann, et al.: Experimental-driven Optimization of Timing Parameters of Contention-based MAC Protocols*

Going beyond energy detection

- Covariance Absolute Value detector
  - needs statistical processing of I/Q signal samples
  - found best for PMSE detection by COGEU project (D4.2)
- Eigenvalue detector
  - e.g. *Zeng, Liang: Eigenvalue-Based Spectrum Sensing Algorithms for Cognitive Radio*
- Information-theoretic detection
  - needs multiple coherent signal paths
  - e.g. *Wang, Tao: Blind Spectrum Sensing by Information Theoretic Criteria for Cognitive Radios*
- Compressive sensing
  - "compressing frequency domain data on VESNA does not bring any advantage with respect to our motivation"

SNE-ESHTER

Embedded Sensing Hardware for
TVWS Experimental Radio

Block diagram

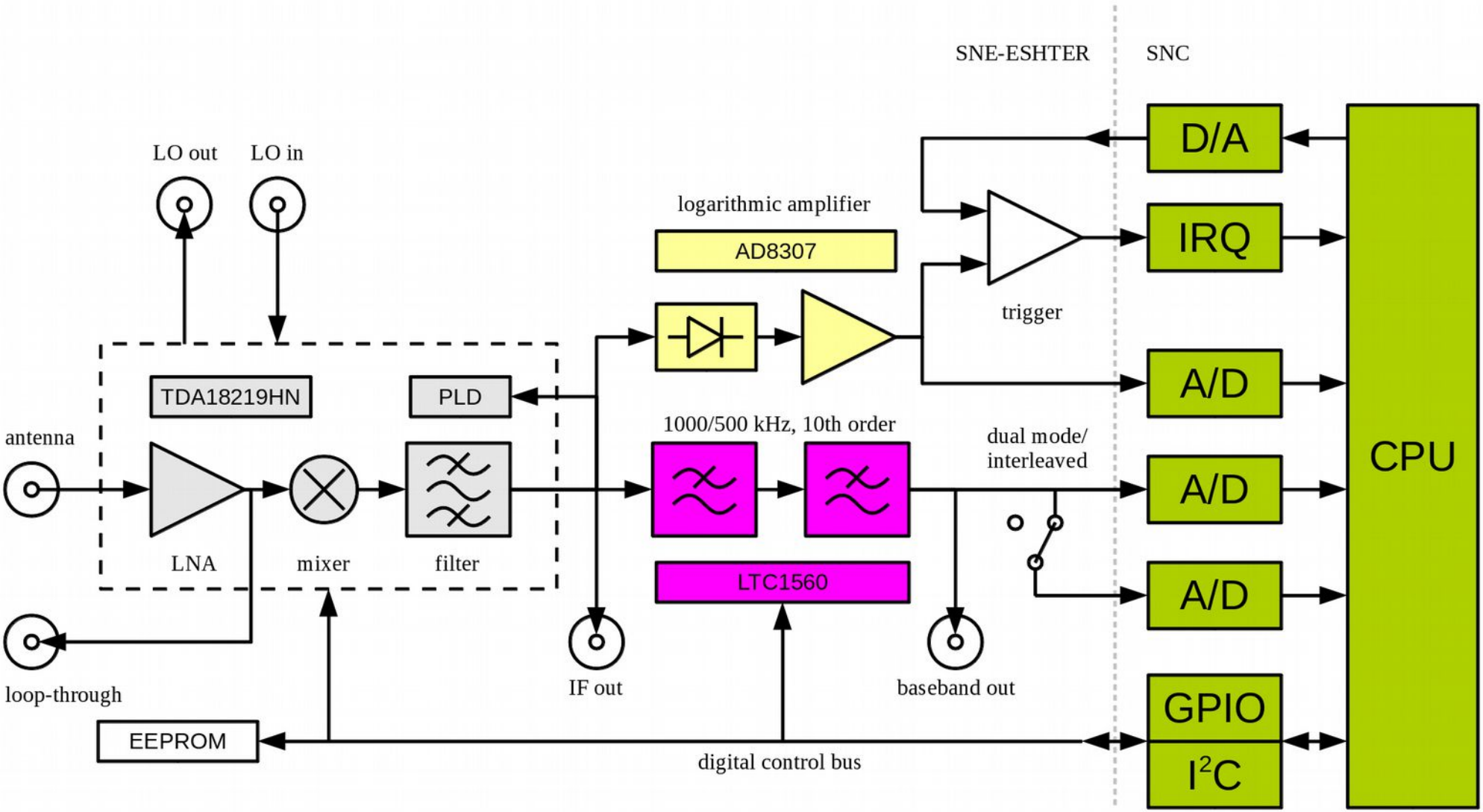

What stays the same

- Energy detection capability stays unmodified
- Same TDA18219HN RF front-end

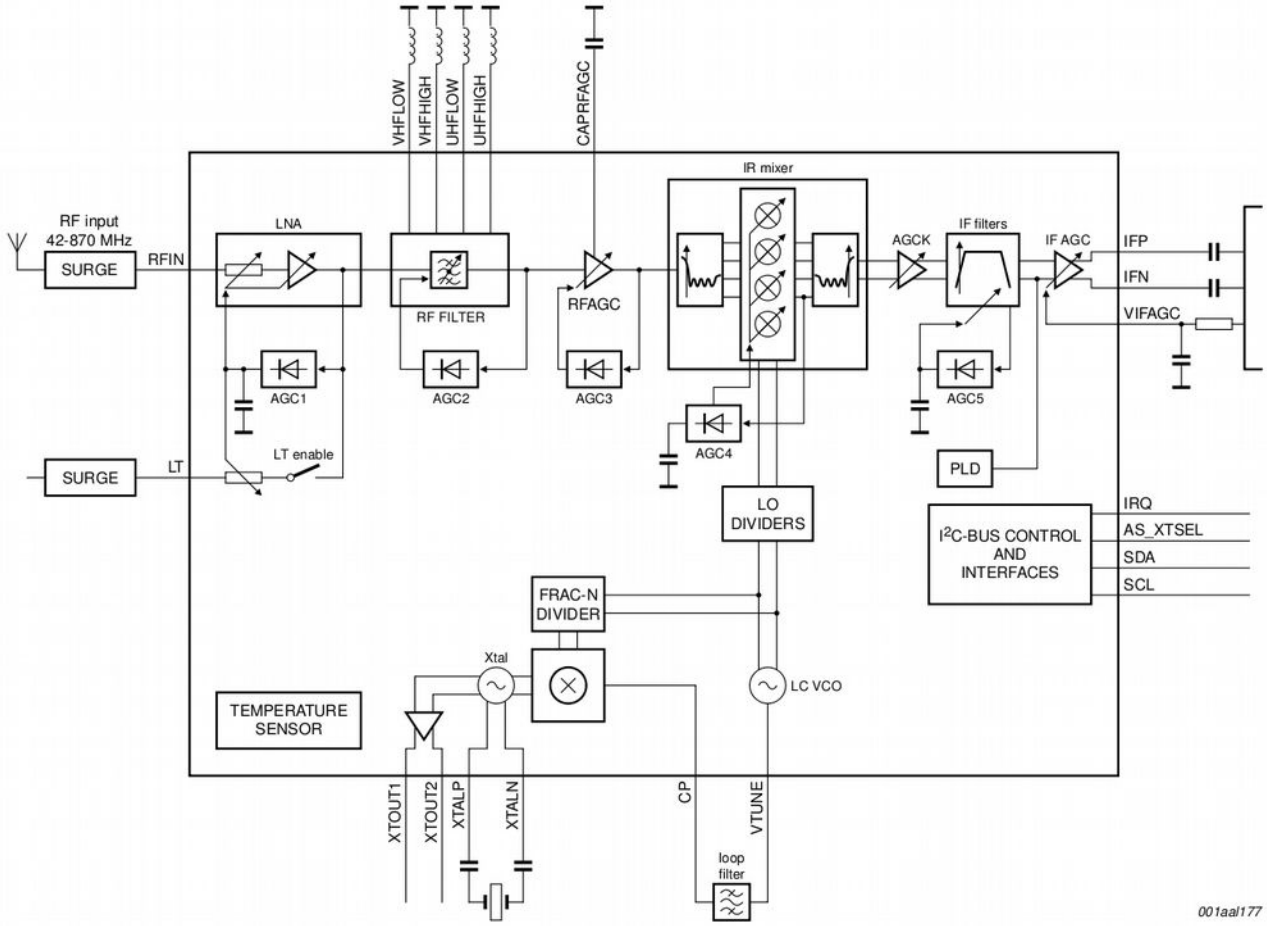

What is new, 1

- Add selectable 1000/500 kHz 10th order elliptic filter
  - additional channel filtering after TDA18219HN for narrow band detection
  - signal at 2 Msamples/s using ADC1+ADC2 in dual-interleaved mode (*http://www.tablix.org/~avian/blog/archives/2013/10/interleaved_adc_mode_on_stm32f1/*)
- Possibility of two coherent signal chains
  - each chain at 1 Msamples/s using ADC1+ADC2 in dual-simultaneous mode
  - stacking two SNE-ESHTER boards on top of each other

Master board provides PLL clock over a dedicated connector

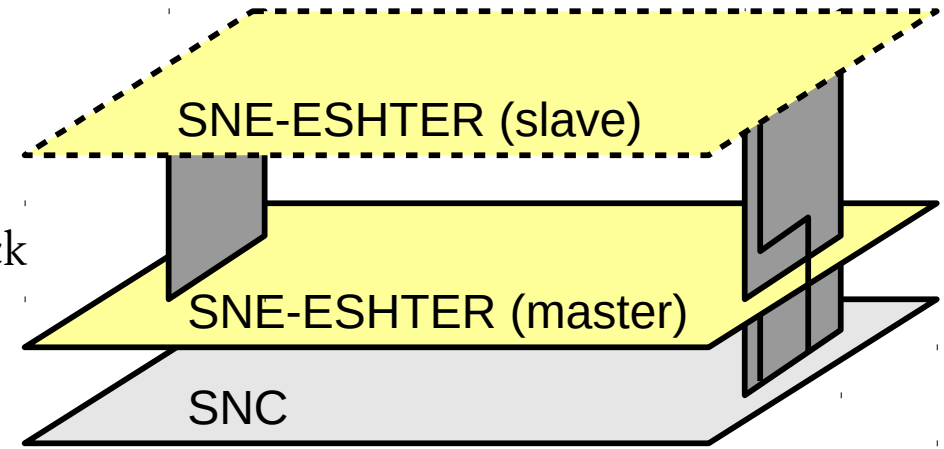

Slave TDA18219HN remapped to a different I^2C address

Master board re-routes signal line from ADC1 to ADC2

What is new, 2

- Trigger subsystem
  - run ADC conversion on selectable energy detector threshold
  - improved timing for CSMA-MAC protocols
- More debugging options
  - LEDs, connectors on signal pipe-line
- Better EMI design
  - metal shielding around critical components
- Remove IEEE 802.15.4/CCxxxx transceiver options
  - not enough pins on the SNE connector
- I^2C EEPROM for identification, calibration tables

TDA18219HN problems

- AGC not under software control
  - “shadowing” limits how fast we can sweep the LO frequency
- Signal distortion with 1.7 MHz channel filter
  - something wrong with AGC?
- Restrictive licensing of reference implementation

```
3.10 Licensee shall not perform any actions with
regard to the Licensed Software in a manner that would
require the Licensed Software or any derivative work
thereof to be licensed under Open License Terms.
```

- Supply problems
  - no European supplier, uncommon film-type inductors

When?

- Prototype hardware until the end of 2013
- Still to do:
  - final circuit schematic
    (MCU pin assignment, filter low-noise power supply)
  - mechanical details (placing of connectors)
  - PCB layout
- Software – “it's done when it's done”
  - it would be nice to support subset WINNF transceiver API or some other standard interface

Questions?

Tomaž Šolc
tomaz.solc@ijs.si